17.1.2 Exercises - Simple Harmonic Oscillations 2

1. A piston moves vertically up and down in a cylinder, as illustrated in Fig.

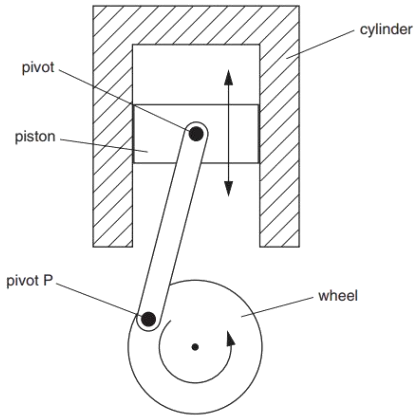

The piston is connected to a wheel by means of a rod that is pivoted at the piston and at the wheel. As the piston moves up and down, the wheel is made to rotate.

a.

i. State the number of oscillations made by the piston during one complete rotation of the wheel.

number = ... [1]

ii. The wheel makes 2400 revolutions per minute. Determine the frequency of oscillation of the piston.

frequency = ...Hz [1]

b. The amplitude of the oscillations of the piston is 42 mm.
Assuming that these oscillations are simple harmonic, calculate the maximum values for the piston of

i. the linear speed,

speed = ...ms^{-1} [2]

ii. the acceleration.

acceleration = ... ms^{-2} [2]

c. On Fig., mark a position of the pivot P for the piston to have

i. maximum speed (mark this position S), [1]

ii. maximum acceleration (mark this position A). [1]

2. The needle of a sewing machine is made to oscillate vertically through a total distance of 22 mm, as shown in Fig.

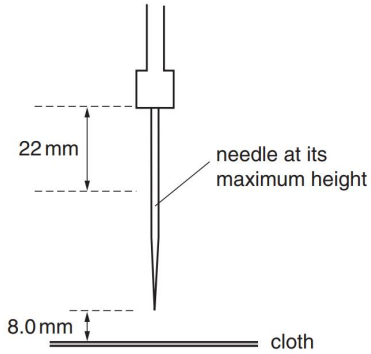

The oscillations are simple harmonic with a frequency of 4.5 Hz.

The cloth that is being sewn is positioned 8.0 mm below the point of the needle when the needle is at its maximum height.

a. State what is meant by simple harmonic motion.

.....

.....[2]

b. The displacement y of the point of the needle may be represented by the equation

$$y = a\cos\omega t$$

i. Suggest the position of the point of the needle at time t = 0.

..... [1]

ii. Determine the values of

a) a,

a = ...mm [1]

b) ω.

ω = ...rad s^{-1} [2]

c. Calculate, for the point of the needle,

i. its maximum speed,

speed = ...ms^{-1} [2]

ii. its speed as it moves downwards through the cloth.

speed = ...ms^{-1} [3]

3.

a. A small ball rests at point P on a curved track of radius r, as shown in Fig.

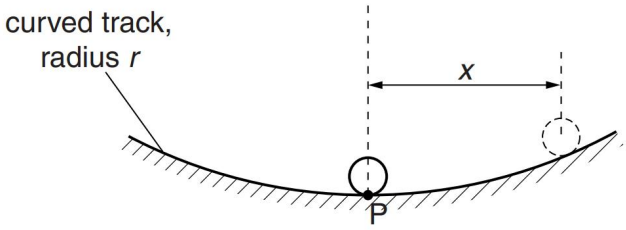

The ball is moved a small distance to one side and is then released. The horizontal displacement x of the ball is related to its acceleration a towards P by the expression

$$a = -\frac{gx}{r}$$

where g is the acceleration of free fall.

i. Show that the ball undergoes simple harmonic motion.

.....

.....[2]

ii. The radius r of curvature of the track is 28 cm.

Determine the time interval τ between the ball passing point P and then returning to point P.

τ = ...s [3]

b. The variation with time t of the displacement x of the ball in (a) is shown in Fig.

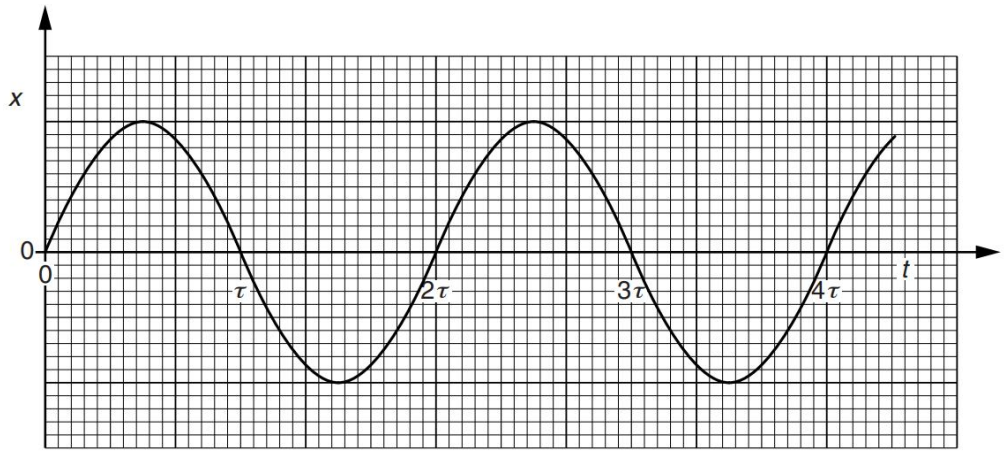

Some moisture now forms on the track, causing the ball to come to rest after approximately 15 oscillations.

On the axes of Fig., sketch the variation with time t of the displacement x of the ball for the first two periods after the moisture has formed. Assume the moisture forms at time t = 0. [3]

4. The piston in the cylinder of a car engine moves in the cylinder with simple harmonic motion. The piston moves between a position of maximum height in the cylinder to a position of minimum height, as illustrated in Fig.

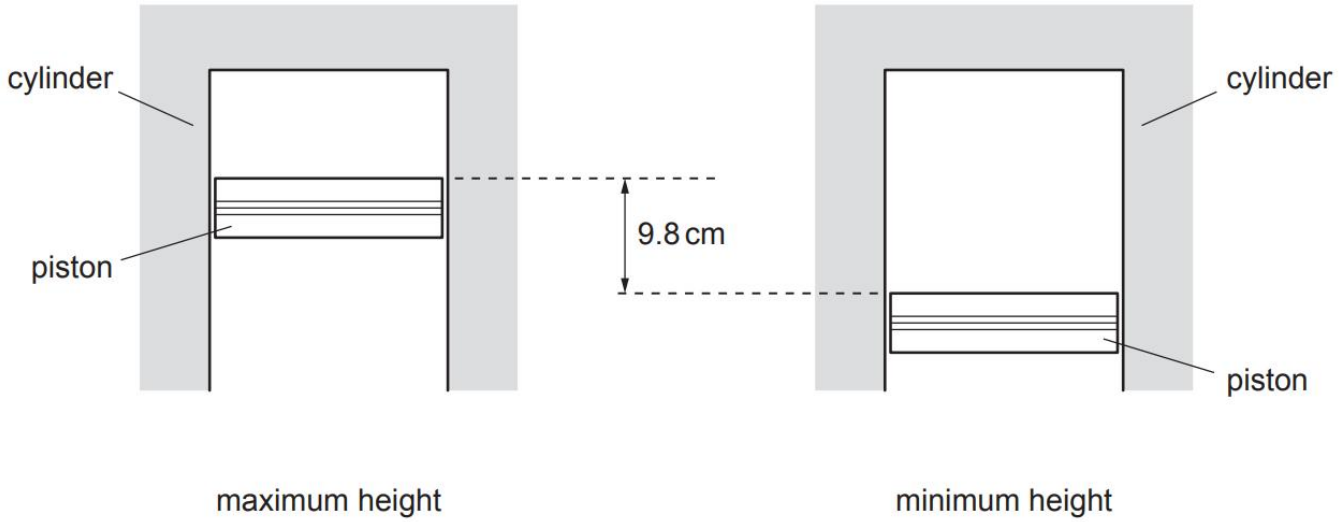

The distance moved by the piston between the positions shown in Fig. is 9.8cm.
The mass of the piston is 640g.
At one particular speed of the engine, the piston completes 2700 oscillations in 1.0 minute.

a. For the oscillations of the piston in the cylinder, determine:

i. the amplitude

amplitude = ...cm [1]

ii. the frequency

frequency = ...Hz [1]

iii. the maximum speed

maximum speed = ...ms^{-1} [2]

iv. the speed when the top of the piston is 2.3cm below its maximum height.

speed = ...ms^{-1} [2]

b. The acceleration of the piston varies.

Determine the resultant force on the piston that gives rise to its maximum acceleration.

force = ...N [3]